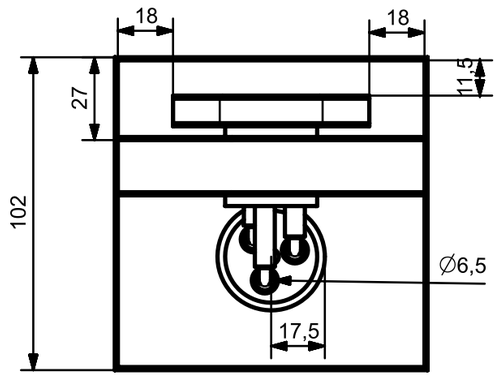

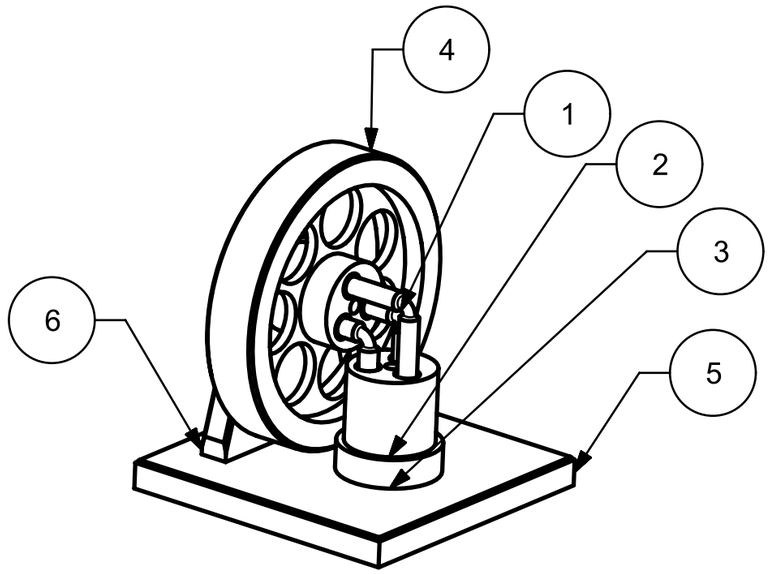

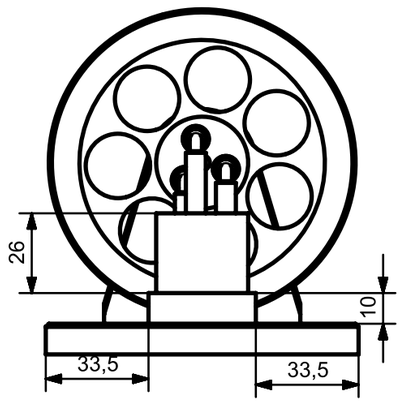

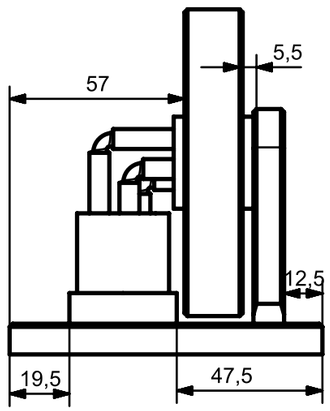

PC NO	PART NAME	QTY
6	FLYWHEEL STAND	1
5	BASE PLATE@	1
4	FLYWHEEL @	1
3	PORT BLOCK	1
2	REVOLVING CYLINDER BODY	1
1	PISTON	3

ALL DIMENSIONS IN MM

RAMCO

THIS DRAWING HAS BEEN PRODUCED USING AN EXAMPLE TEMPLATE PROVIDED BY SIEMENS PLM SOFTWARE

FIRST ISSUED	27-12-2025
DRAWN BY	S.MAHAVISHVA
CHECKED BY	
APPROVED BY	

TITLE

SIZE	DRG NO.	SHEET REV
A3	FULL ASSEMBLY	A
SCALE 1:1		SHEET 1 OF 2

A3

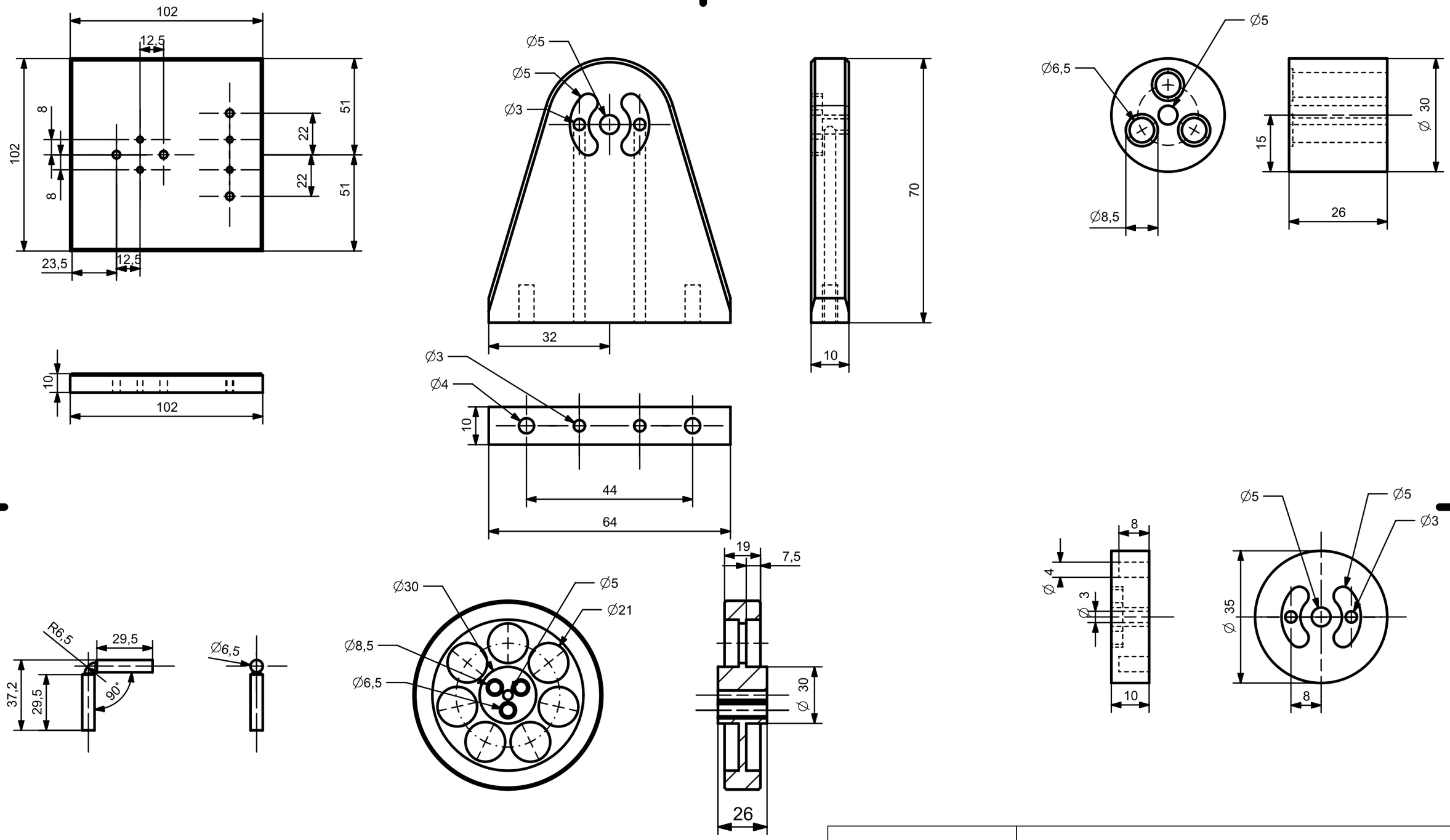

ALL DIMENSIONS IN MM

RAMCO		THIS DRAWING HAS BEEN PRODUCED USING AN EXAMPLE TEMPLATE PROVIDED BY SIEMENS PLM SOFTWARE	
FIRST ISSUED	27-12-2025	TITLE	
DRAWN BY	S.MAHAVISHVA		
CHECKED BY			
APPROVED BY		SIZE A3	DRG NO. FULL ASSEMBLY / SHEET REV A
		SCALE 1:1	SHEET 2 OF 2

A3